Standard Drop Frame (Rectangular)

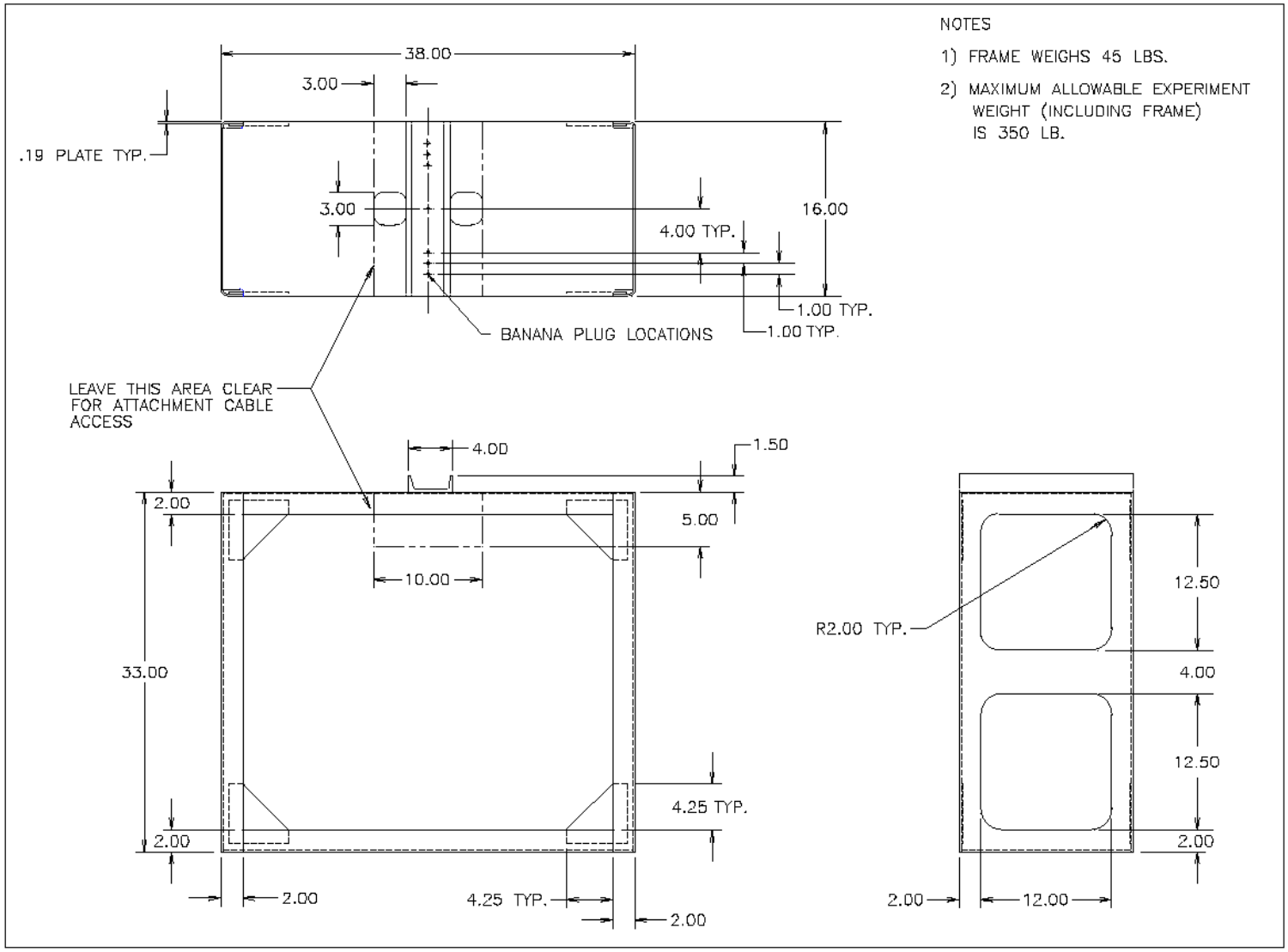

NASA Glenn Research Center
2.2 Second Drop Tower