Standard Drop Frame (A-Frame)

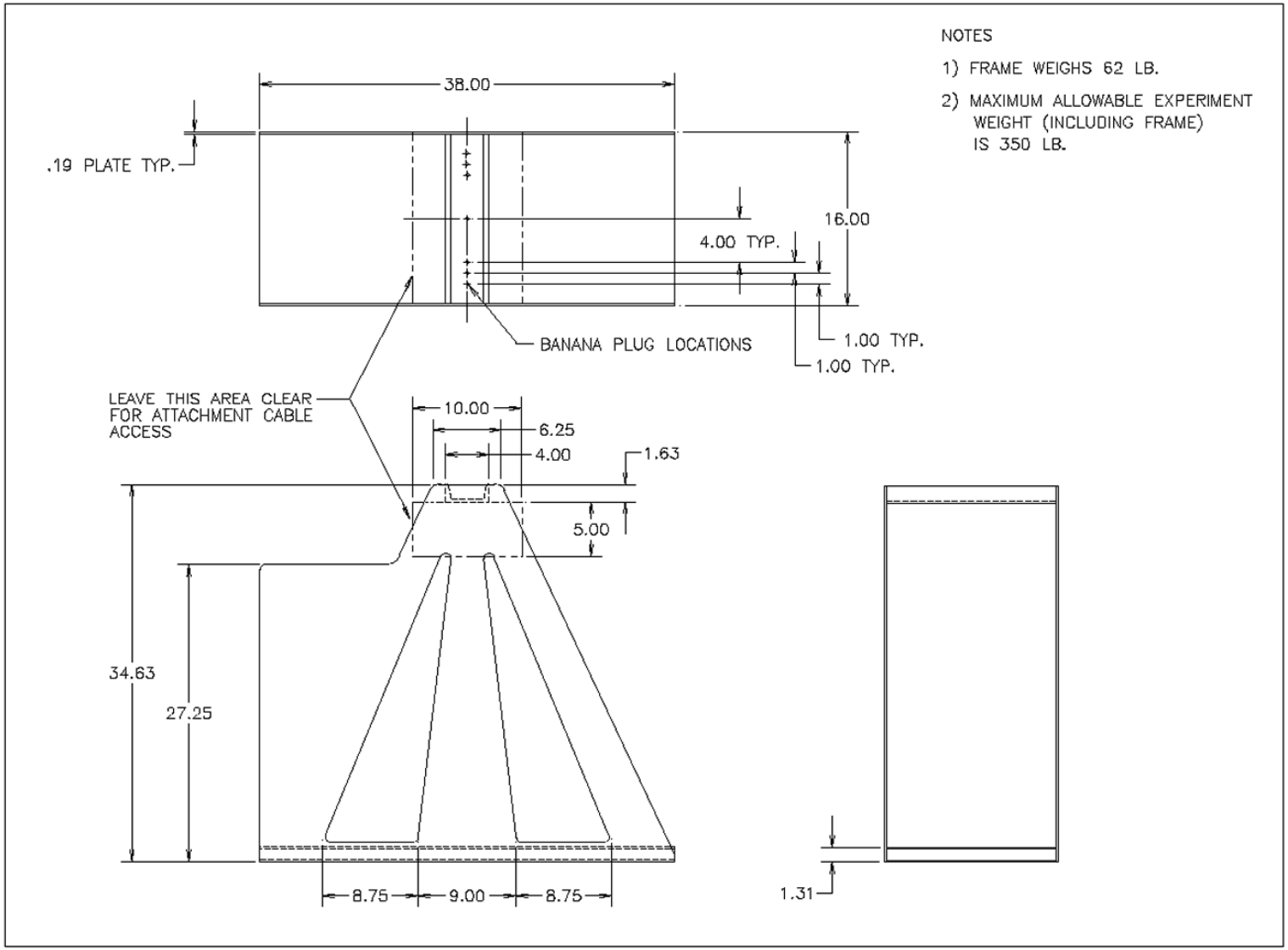

NASA Glenn Research Center
2.2 Second Drop Tower