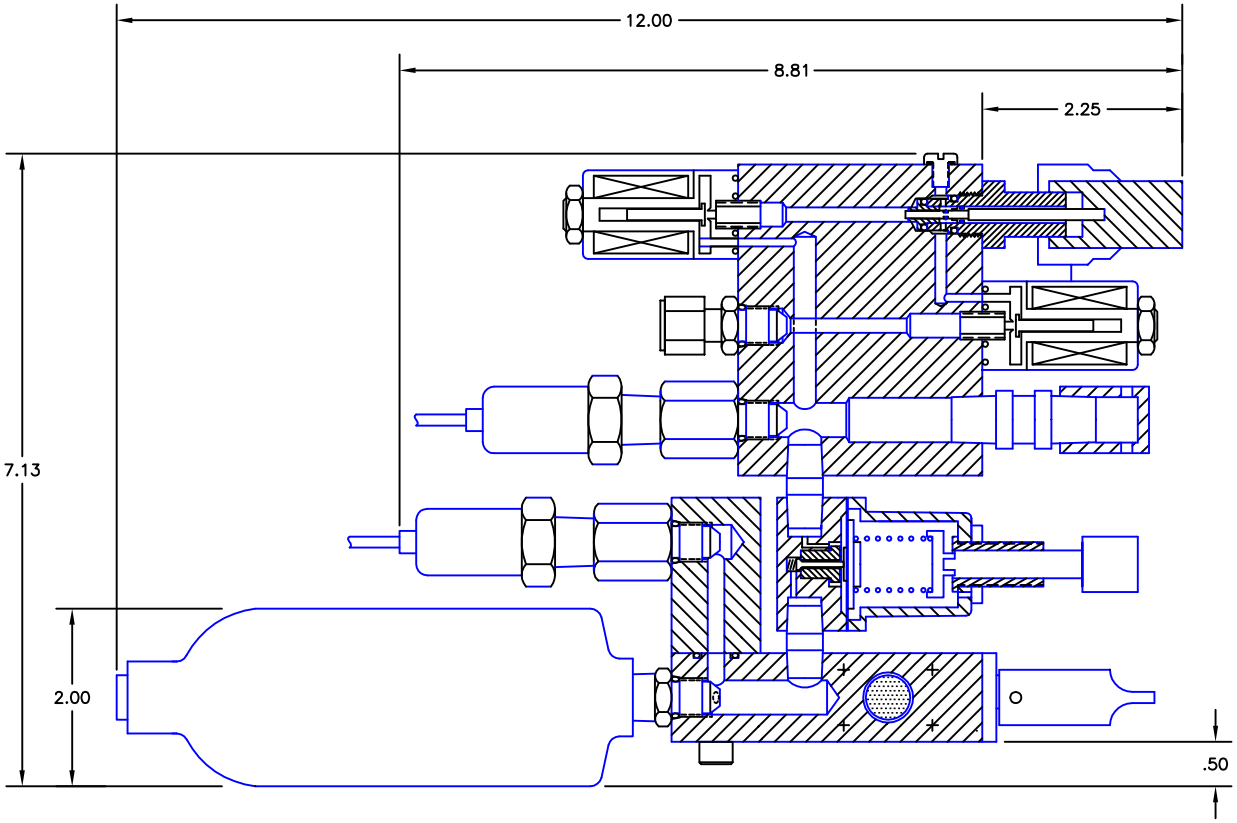

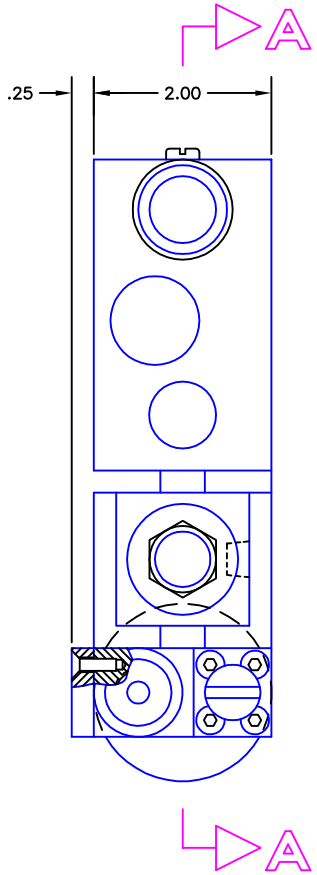

PATH OF PASSAGES IS SHOWN
SLIGHTLY ALTERED FOR CLARITY

CHG	ZONE	DESCRIPTION	APP/DATE

REVISIONS

UNLESS OTHERWISE SPECIFIED DIMENSIONS ARE IN INCHES		CONTRACT CONTRACTOR	
TOLERANCE ON		TASK ORDER	
.X	±	DRAFTER	
.XX	±	ENGINEER	
.XXX	±	DESIGNER	
FRACTION	±	DIMENSIONING AND TOLERANCING PER ASME Y14.5M–1994	
ANGULAR	±		
BREAK EDGES			

NATIONAL AERONAUTICS AND SPACE ADMINISTRATION
JOHN H. GLENN RESEARCH CENTER
LEWIS FIELD
CLEVELAND, OHIO

INTEGRATED PLUMBING

REFERENCE DIMENSIONS

SIZE	DRAWING NUMBER	REV	BLDG	AREA
C		—	45	
			UNITS: INCH	
SCALE: 1/1	OFFICIAL DATE 3/04	SHEET 1 OF 1	DISCIPLINE MECHANICAL	

AutoCAD 2002

REV —
DRAWING NUMBER
SIZE C