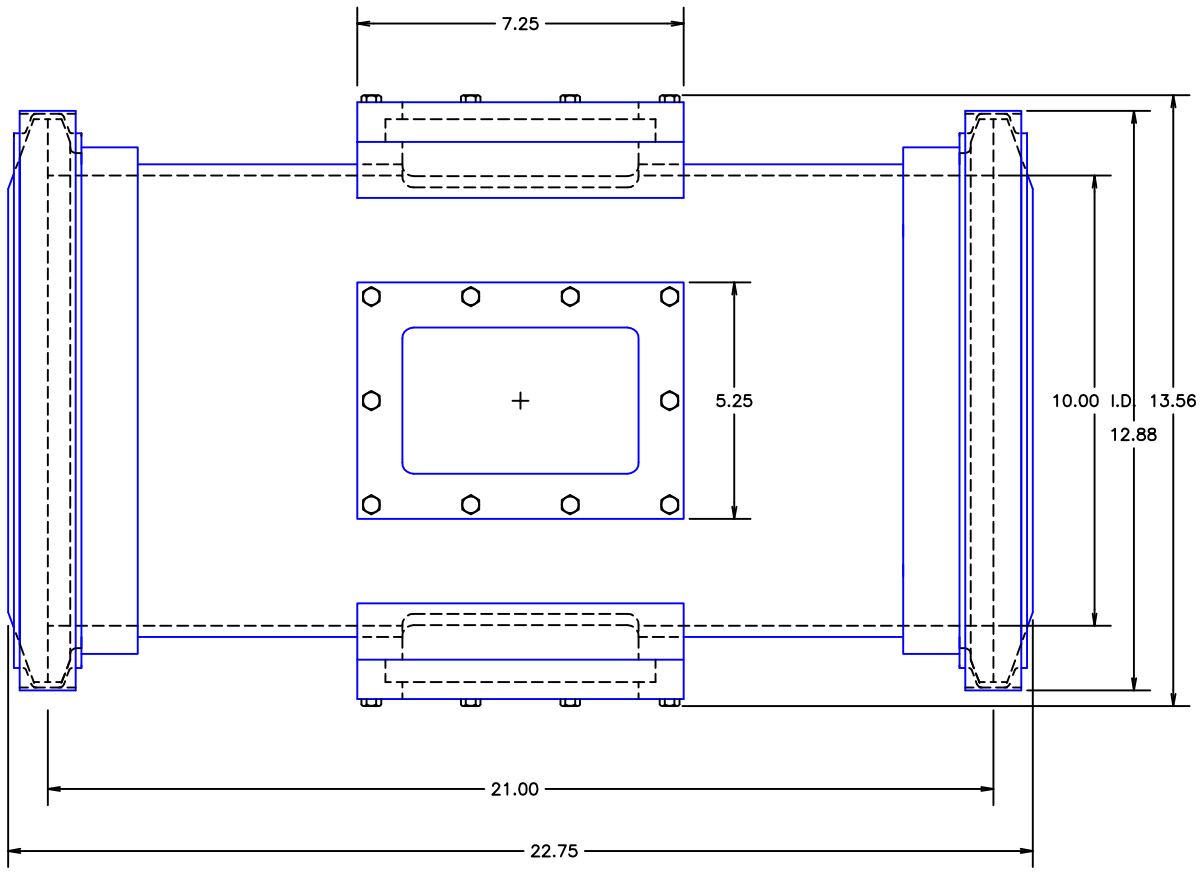


| CHG | ZONE | DESCRIPTION | APP/DATE |
|---|---|---|---|
| | | REVISIONS | |

| | | | |
|---|---|---|---|
| UNLESS OTHERWISE SPECIFIED DIMENSIONS ARE IN INCHES | | CONTRACT<br>CONTRACTOR | |
| TOLERANCE ON | | TASK ORDER | |
| .X | ± | DRAFTER | |
| .XX | ± | ENGINEER | |
| .XXX | ± | DESIGNER | |
| FRACTION | ± | DIMENSIONING AND TOLERANCING PER ASME Y14.5M–1994 | |
| ANGULAR | ± | | |
| BREAK EDGES | | | |

NATIONAL AERONAUTICS AND SPACE ADMINISTRATION
JOHN H. GLENN RESEARCH CENTER
LEWIS FIELD
CLEVELAND, OHIO

COMBUSTION STANDARD CHAMBER

REFERENCE DIMENSIONS

| SIZE | DRAWING NUMBER | REV | BLDG | AREA |
|---|---|---|---|---|
| C | | — | 45 | |
| | | | UNITS: INCH | |
| SCALE: 1/2 | OFFICIAL DATE 3/04 | SHEET 1 OF 1 | DISCIPLINE MECHANICAL | |

REV —
DRAWING NUMBER
SIZE C

AutoCAD 2002