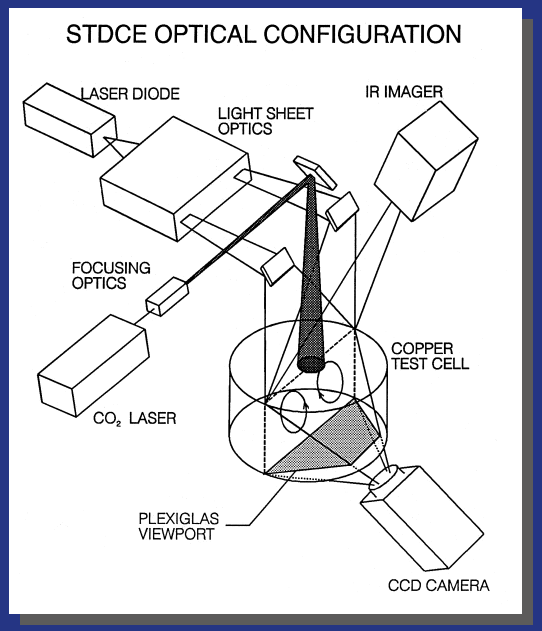

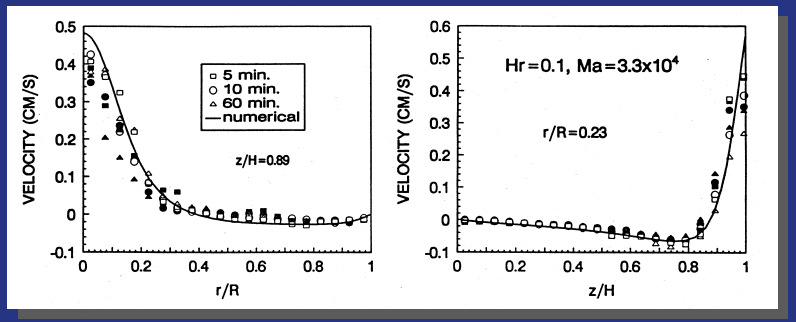

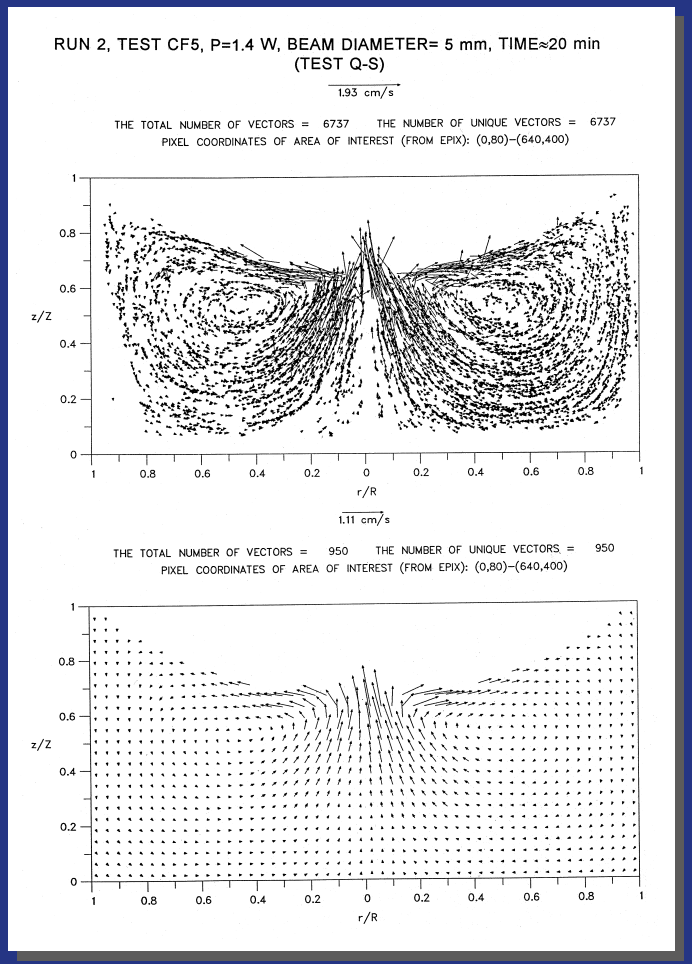

Comparison of data and model predictions for STDCE: Constant flux conditions