Project Space Vision

Ophthalmic Tele-Health: For the Benefit of All Human Kind

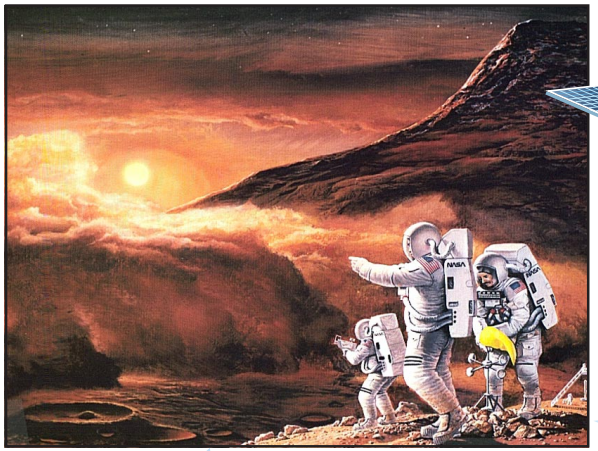

Space Exploration

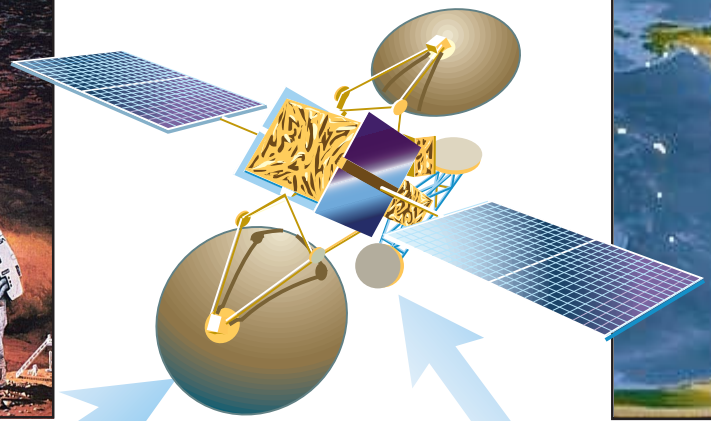

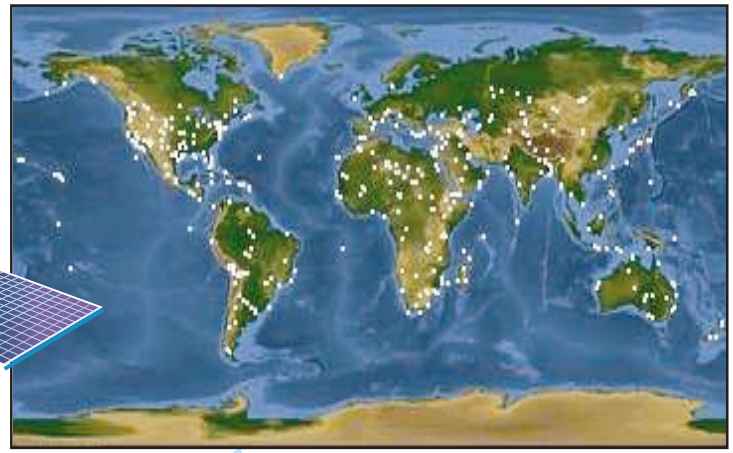

World Wide Usage

Space Vision Goggles

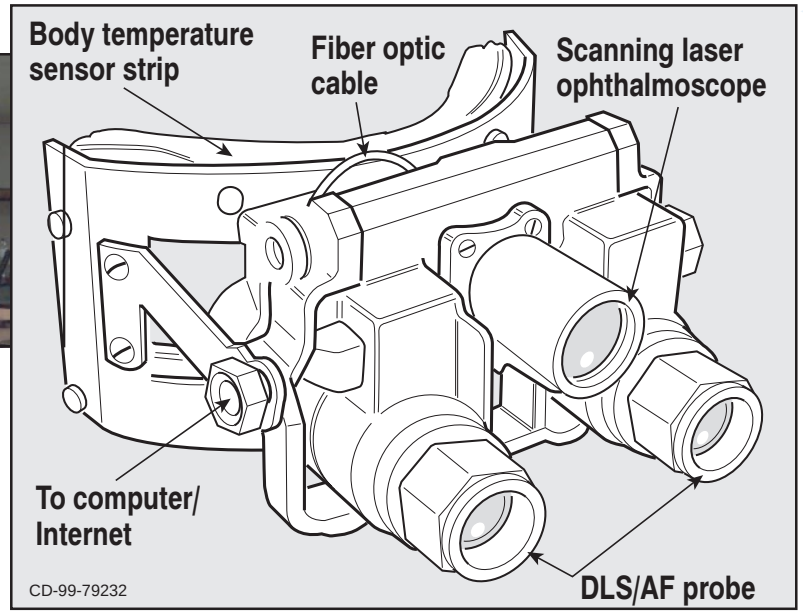

Doctor Monitoring Data

- Cataracts
- Diabetic Retinopathy
- Blood-Glucose
- Retinal Detachment
- Body Temperature
- Tele-Health (Astronauts, Mars Explorers, Terrestrial Patients)

CD-99-79375

Contact: Dr. R.R. Ansari (216) 433-5008